REMARK : RoHS REQUIREMENT APPLIED
(符合RoHS)

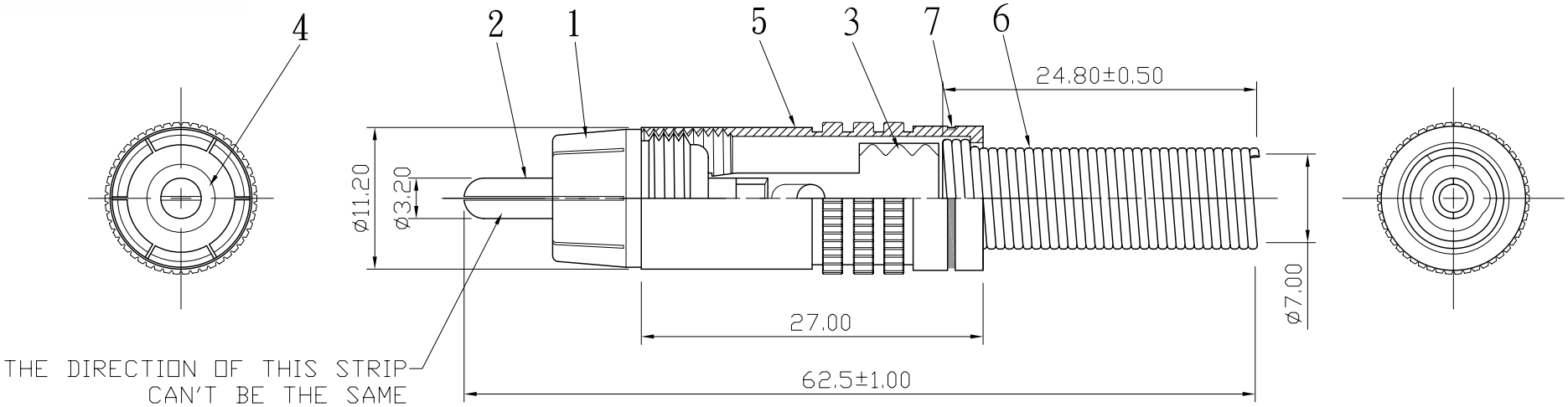

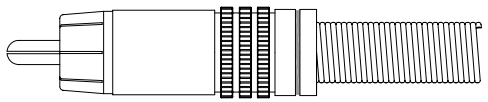

S 1 : 1

NO.	Description	Unit	Materials	Finish	Drawing No.
7	color ring	1	pvc	red/blue/white yellow/green	
6	spring	1	brass	black plated	
5	shell	1	brass	black plated	
4	insulator	1	teflon	white	
3	clip	1	brass	gold	
2	contact pin	1	brass	gold	
1	body	1	brass	gold	

DIMENSIONS ARE IN MILLIMETERS

UNLESS OTHRWISE PECIFIED TOLERANCES
(一般公差)
0.5~6 = ±0.2
>6~30 = ±0.4
>30~120 = ±0.6
>120~315 = ±1
>315~1000 = ±1.6
ANGLES(角度) = ±5°

SCALE 2 : 1 UNIT MM

CHECKED

DRAWN *Lala*

DATE 2009. 12. 03

TITLE RCA PLUG

DRAWING NO. RP-1310BPG-TEF-A-RD/ WE -7.0

FILE NO.